GRÖMO

Technical data sheet

# GUTTER QUADRANT, UNIVERSAL WITH PIN

**Article No.:** 60633
**Nominal size [mm]:** 333
**Material:** Copper

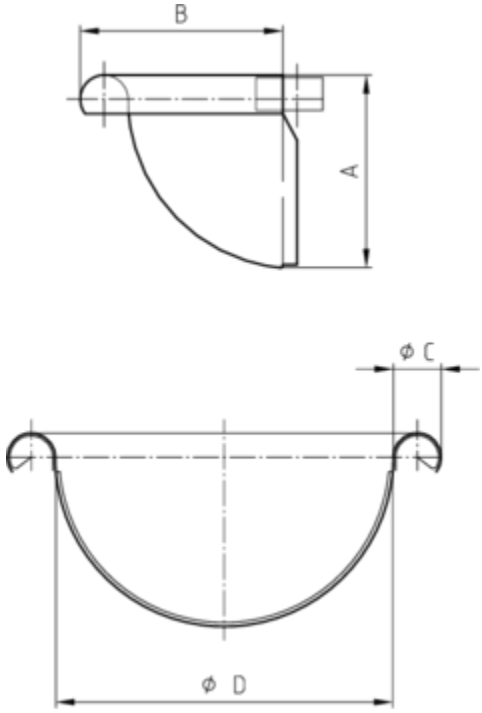


**Dimensions [mm]:**

| A | B | C | D |
|---|---|---|---|
| 87 | 92 | 20 | 153 |

**Note:**
For soldering



Errors and technical modification subject to change.